MorehouseCowles

Lab scale dissolvers, mixers and mills

For formulation development or small scale production batches, MorehouseCowles offers scaled down versions of our standard dissolvers, mixers and mills, ideal for a laboratory setting. Streamline the scale-up process to full-size production units with these mixers and mills for a smooth commercialization experience.

Made in the USA

V-Series Single Shaft High Speed Dissolver

V-12-1.0 AND V-12-2.0

MorehouseCowles V-series standard designs deliver the ultimate dispersion, de-agglomeration and dissolving technology. Its reliable, versatile, and economical design is built for decades of dependable operation. With standard safety features, these dissolvers are designed to help prevent injury without sacrificing performance and reliability.

	V-12-1.0	V-12-2.0
CAPACITY:	– 1/4 to 1 gallon batches	– 1 to 5 gallon batches
MATERIAL VISCOSITY:	– Up to 15,000 cP	– 15,000 cP
MOTOR:	1 hp – 3600 RPM, 230/460 volt, 60 Hz, 3 phase – TEFC only (Non-explosion proof) – Inverter duty motor 4:1 ratio – Premium efficiency	2 hp – 3600 RPM, 230/460 volt, 60 Hz, 3 phase – TEFC Class I, Division 1, Group D (explosion proof) – Inverter duty motor 4:1 ratio – Premium efficiency
LIFT:	– Air operated lift – 10" stroke, heavy-duty industrial cylinder	– Air operated lift – 14" stroke, heavy-duty industrial cylinder
DRIVE:	– V-belt and sheave – Variable speed via Micro-Variable Frequency Drive (VFD/inverter)	– V-belt and sheave – Variable speed via Variable Frequency Drive (VFD/inverter)
SHAFT:	– High strength 17-4SS heat treated	– 304 stainless steel
SPEED RANGE:	– 7600 RPM (4000 FPM) at 60 Hz approx.	– 5000 RPM (5240 FPM) at 60 Hz approx.
IMPELLER BLADE:	– 2" diameter genuine Cowles high-shear – 304 stainless steel	– 4" diameter genuine Cowles high-shear – 304 stainless steel
INSTRUMENTATION:	– Digital RPM readout from micro drive	– Digital tachometer in NEMA 7 (explosion proof) housing
UTILITIES REQUIRED:	– Electrical power single phase 115 volt input – Clean, dry, compressed air at 100 psi/g	– Electrical power 3 phase – Clean, dry, compressed air at 100 psi/g
SPECIAL FEATURES:	– Energy efficient – Variable speed plug-n-play – Single position – Pot spring loaded cover, holder and locator – Designed for easy maintenance	– Energy efficient – Variable speed – Single position – Designed for easy, less costly maintenance – Tank holder
SAFETY FEATURES:	– Lift height limit switch – will not run if unit is raised above 1.50" – Shaft enclosure with bellows – Drive guard – covers belt and pulleys – Power input disconnect from micro drive for maintenance	– Lift height limit switch – will not run if unit is raised above 4" – 6-1/2" shaft guard – Drive guard – covers belts and pulley
CONSTRUCTION:	– 17-4ph/304 stainless steel for all wetted parts – Non-wetted parts: carbon steel painted with white two-part epoxy	– 303/304 stainless steel, all wetted parts – Non-wetted parts: carbon steel painted with white two-part epoxy

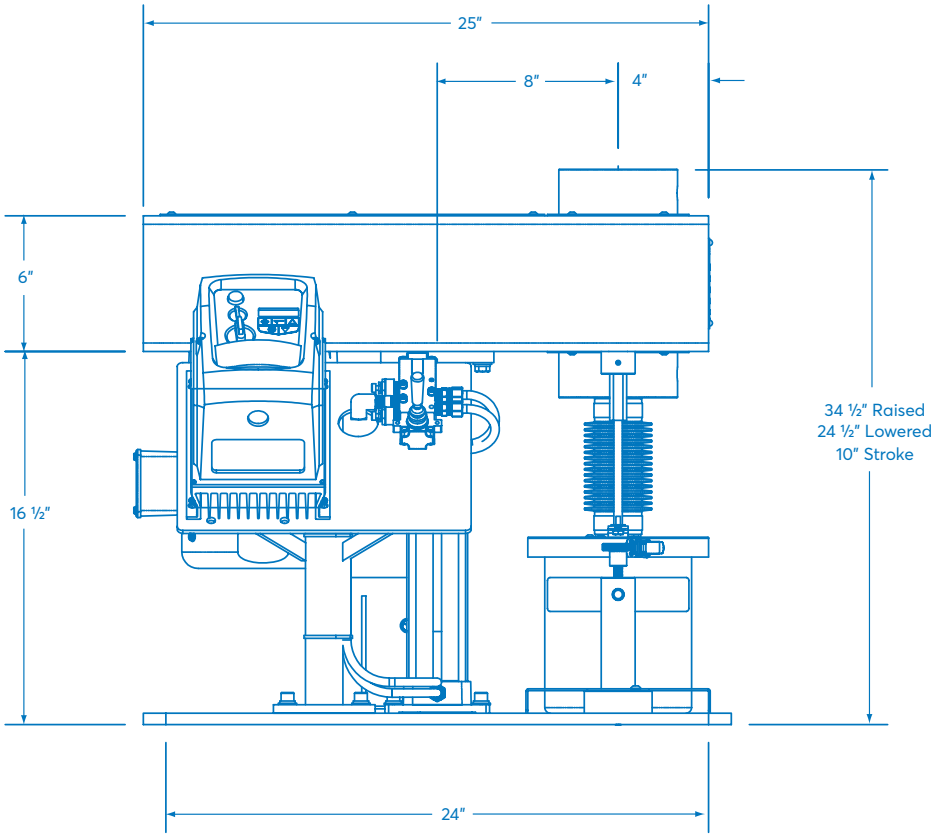

OPTIONAL UPGRADES:

DRIVE

1. Variable Frequency Drive (VFD/ Inverter), NEMA 1 (non-explosion proof, for non-hazardous areas)
2. **V-12-2 only** - Operator Basic Pendant Remote Control, NEMA 7 (explosion proof) includes:
   - On/Off button
   - Red Mushroom Stop button
   - Potentiometer for speed control
3. **V-12-2 only** - Operator Master Control Remote Control, NEMA 7 (explosion proof) includes:
   - On/Off button
   - Red Mushroom Stop button
   - Potentiometer for speed control
   - Digital ammeter
   - Digital tachometer
4. **V-12-2 only** - Drive Cabinet, NEMA 12 (dust proof) for protection against environment and easy installation of inverter

SPEED

1. Custom speed range for various dissolving applications

IMPELLER BLADE

1. POLY-PELLER™ blade in lieu of high-shear blade – no additional cost
2. Full line of specialty impeller blades

CONSTRUCTION

1. 316L stainless steel wetted parts
2. All stainless steel

LID

1. **V-12-2 only** - Spring loaded tank dust cover (lid) with bellows.

CONTROL STAND

1. **V-12-2 only** - For mounting NEMA 7 remote control pendant and pneumatic lift control valve

ViscoMAX™ Multi-Shaft Mixer

VML-1

Ultimate mixing and uniformity batch after batch

MorehouseCowles ViscoMAX multi-shaft mixers are designed for dissolving extremely high viscosity materials of up to 4,000,000 cP. These mixers feature two to three shafts with each having its own specific function to ensure complete homogeneity. Dual or triple motor designs are power matched to your process requirements so you are assured of adequate power availability and efficiency.

Ram Discharge

More product to sell, less to waste
Your heavy, viscous products can be effortlessly removed from the tank when you activate the MorehouseCowles hydraulic Ram Discharge System. With a powerful push, your product is forced out of the dispersion tank so it takes less labor and time to empty and clean your equipment.

Shafts

ViscoMAX mixers come standard with two shafts: A high-speed impeller that swirls ingredients throughout the tank and a second, low-speed anchor blade that wipes the vessel walls and pushes product continuously into the high-shear zones for thorough mixing. An optional third shaft can be added to control heat buildup. This intermediate speed shaft mixes product 50% faster than most two-shaft models and works especially well with higher viscosity materials. This eliminates dead and hot spots in heat or shear-sensitive products. Use all three blades simultaneously, or turn off the high-speed impeller to only use the sweep and third shaft when shear is not required. The third shaft is available in standard and custom styles depending on the application.

SPECIFICATIONS

	VML-1
CAPACITY GAL (LITERS)	0.25 – 0.75 (0.94 - 2.83L)
TANK SIZE - FLAT BOTTOM	6.5" ID X 8" H
HP* (HIGH-SPEED)	2
HP* (LOW-SPEED)	2
SPECIAL FEATURES	– Dual and triple motor designs for adequate power – Energy efficient – Variable speed – Designed for easy, less costly maintenance – Glass filled Teflon™ scrapers mounted on slow speed blade for sides and bottom of tank – Thermowell attached to cover, with digital readout.
SAFETY FEATURES	– Lift height limit switch – will not run if unit is raised – Drive guard – covers belts and pulley

*HP is based on equipment mixing a maximum viscosity of 250,000 cP

OPTIONS:

LIFT
1. Tank-mount designs
2. Hydraulic lifts for easy tank change: Single or dual hydraulic lifts in either air over oil or electric hydraulic powered

DRIVE
1. Variable speed drives are available in variable frequency motor drives
2. Remote drive controls for all drives

SHAFTS
1. Third shaft
2. Custom options: augers, gate blades, butterfly mixers, rotor-stator and axial turbines.

TANKS
1. Temperature controls
2. Cooling and heating jackets
3. Spare tanks
4. Ram discharge press

OTHER
1. Vacuum powder loading tube

Zinger™ Horizontal Media Mill

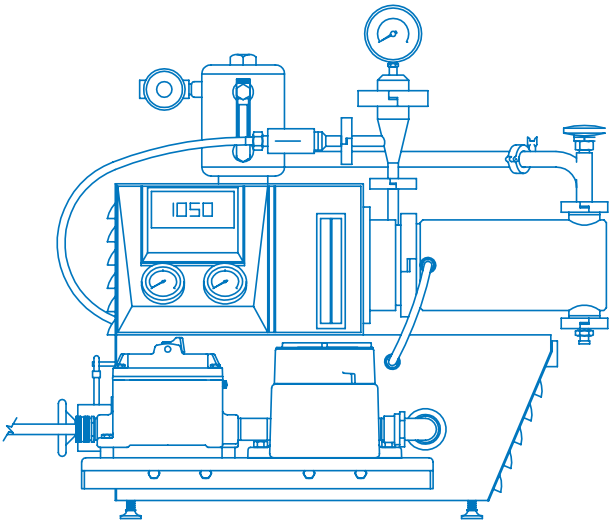

XL-1

This completely sealed, self-contained grinding and dispersion mill produces fine and ultra-fine dispersions. The Zinger uses an exclusive rotor and vessel design to aggressively move media through the slurry and has proven to reduce particle size in significantly less time than the conventional disc mill design. This horizontal design requires less energy and allows the use of smaller media. Low to extremely high viscosity slurries are easily and efficiently processed using its unique rotor and chamber design.

Efficient, continuous milling action

A prepared pre-mixed liquid/solid slurry is continuously pumped into a pressure-sealed horizontal chamber. The chamber contains grinding media and several shaft-mounted rotors. Each rotor is fitted with specially designed vanes. Media is accelerated at high velocity through the slurry toward the chamber wall, impacting, shearing, and reducing the size of the solid slurry particles.

Grinding Media

The size and type of grinding media are the two most important factors in the quality and quantity of the product processed in a small media mill. There are numerous types and sizes of media available, consult our media experts for proper requirements. It is the combination of the media and the product that ultimately determines how well your mill performs.

SPECIFICATIONS

	XL-1
CAPACITY GAL (LITERS)	– 0.33 (1.25) – 0.25L & 0.5L sizes also available
THROUGHPUT GAL/HR	– 0-10
MOTOR	1 hp – 1800 RPM, 115/230 volt, 60 Hz, 1 phase – TEFC Class I, Division 1, Group D (explosion proof) – Premium efficiency – Across the line single speed
DRIVE	– Mechanical variable speed drive through belt and pulley system
SHAFT	– 303 stainless steel
SHAFT SPEED	– 3602 RPM
DISCS	– 2" diameter patented stainless steel pumping-style rotors
PUMP/PRODUCT FEED	– Viking gear pump – Speed reducer: traction drive belt off main motor sheave
TYPICAL MEDIA LOAD	– 80% of Gross Volume
INSTRUMENTATION	1. **Control station:** Pressure gauges, sensors, interlocks, logic circuit, start/stop buttons for main motor, circulator and product pump; potentiometer for product pump, and status lights for correct start-up sequencing and automatic shut down in upset conditions. All in a NEMA7 explosion-proof enclosure. 2. **Drive cabinet:** Inverters for main motor and pump motor, start button for seal reservoir motor, and electrical in NEMA12 (dust proof) enclosure. Separate from main unit.
UTILITIES REQUIRED	– Electrical power 1 phase
DIMENSIONS	– 32" L X 20.5" W X 25" H
SPECIAL FEATURES	– The "jog" or "pulse" function is only operational if the product feed pump is on. Prevents unnecessary media and mill wear. – Telescoping chamber allows easy and complete access to rotor, shaft and chamber interior without need of heavy lifting equipment – Discharge port valve relieves internal chamber pressure for screen removal or to drain cleaning solvent – Media separation device: "lift-out" heavy-duty cartridge, extra-large cylindrical screen with low internal operating pressure – Dual mechanical cartridge type shaft seal cooled with recirculation pump and fluid reservoir – Fully-baffled, high-velocity, cooling jacket on chamber for temperature control
SAFETY FEATURES	**High pressure chamber shutdown:** All operators shut down if chamber is over pressure
CONSTRUCTION	– All parts in contact with product are 304 stainless steel – All non-wetted parts are painted dark blue and gray solvent-resistant paint

MorehouseCowles

Stone Mill

230

Since 1925, MorehouseCowles Stone Mills have proven to be the most reliable and efficient way to process hundreds of different materials from food, cosmetics, and ceramics to paints, inks and grease.

Our stone mills break down a product or mixture to very small particle sizes. They offer grinding technology for dry to liquid processing where 100% of the material passes through the milling surfaces for superior consistency and performance.

MorehouseCowles stone mills feature a very simple design and process with extra heavy-duty construction that has earned them a reputation as the "reliable workhorse". This long-lasting reliability is only possible by using the finest materials and construction techniques. The highly polished inner surfaces facilitate easy cleaning in sanitary applications and fast product or color changes.

SPECIFICATIONS

	230 Series
THROUGHPUT GAL/HR*	– 1 to 1.5
MOTOR	1 hp – 3600 RPM, 115/230 volt, 60 Hz, 1 phase – TEFC Class I, Division 1, Group D (explosion proof) – Across the line single speed
DRIVE	– Direct coupled – Single full speed
SPINDLE	– 316 stainless steel
SPINDLE SPEED	– 3600 RPM
STONES	– 2" diameter, 54 & 80 grit
PRODUCT FEED	– Funnel or optional NPT threaded inlet or Tri-clover adaptor
UTILITIES REQUIRED	– Electrical power 1 phase
DIMENSIONS (WITH FUNNEL)	– 15" L X 10-1/4" W X 30" H
SPECIAL FEATURES	– Precision adjustment wheel permits precise stone clearance adjustment within 0.001" for consistent processing – Dual-bearing spindle allows positive, stable alignment of stones, connected to motor with flexible coupling for longer bearing life – Water-jacketed frame, permits optional heating or cooling of the process chamber – Collet lock maintains exact adjustment, minimizes vibration – Quiet high-speed operation – Easy-to-clean process chamber
CONSTRUCTION	– All parts in contact with product are 316 stainless steel, except for aluminum oxide stones – All non-wetted parts are 304 stainless steel construction – 304 Stainless steel base with mill finish

*depends on product characteristics

Made in the USA

For more information, visit **morehousecowles.com** or contact MorehouseCowles experts today at **sales@morehousecowles.com** or **+1 (909) 627 7222.**

43411-RB-JS

01/2023